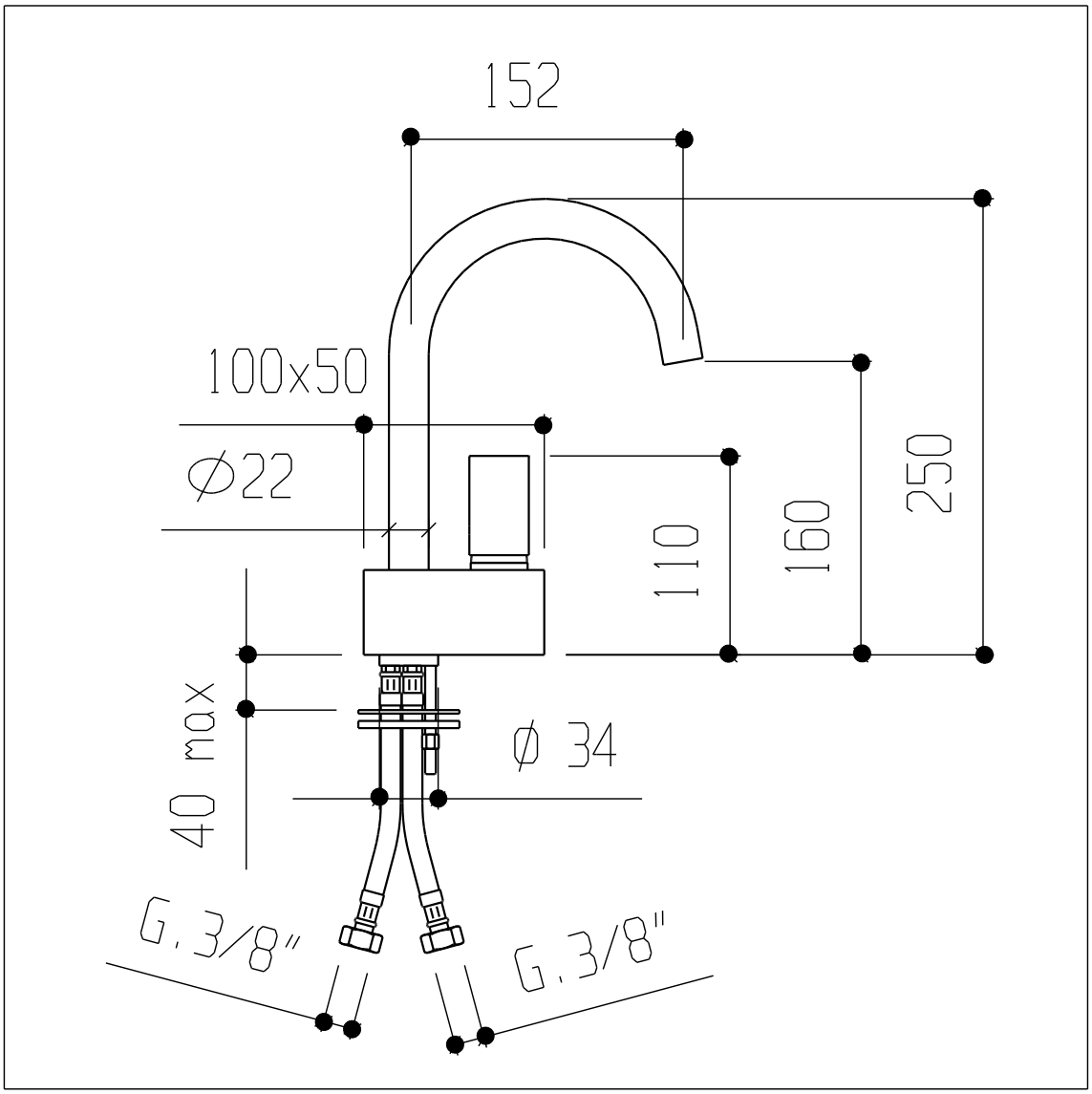
152
100x50
⌀22
110
160
250
40 max
⌀ 34
G.3/8"
G.3/8"