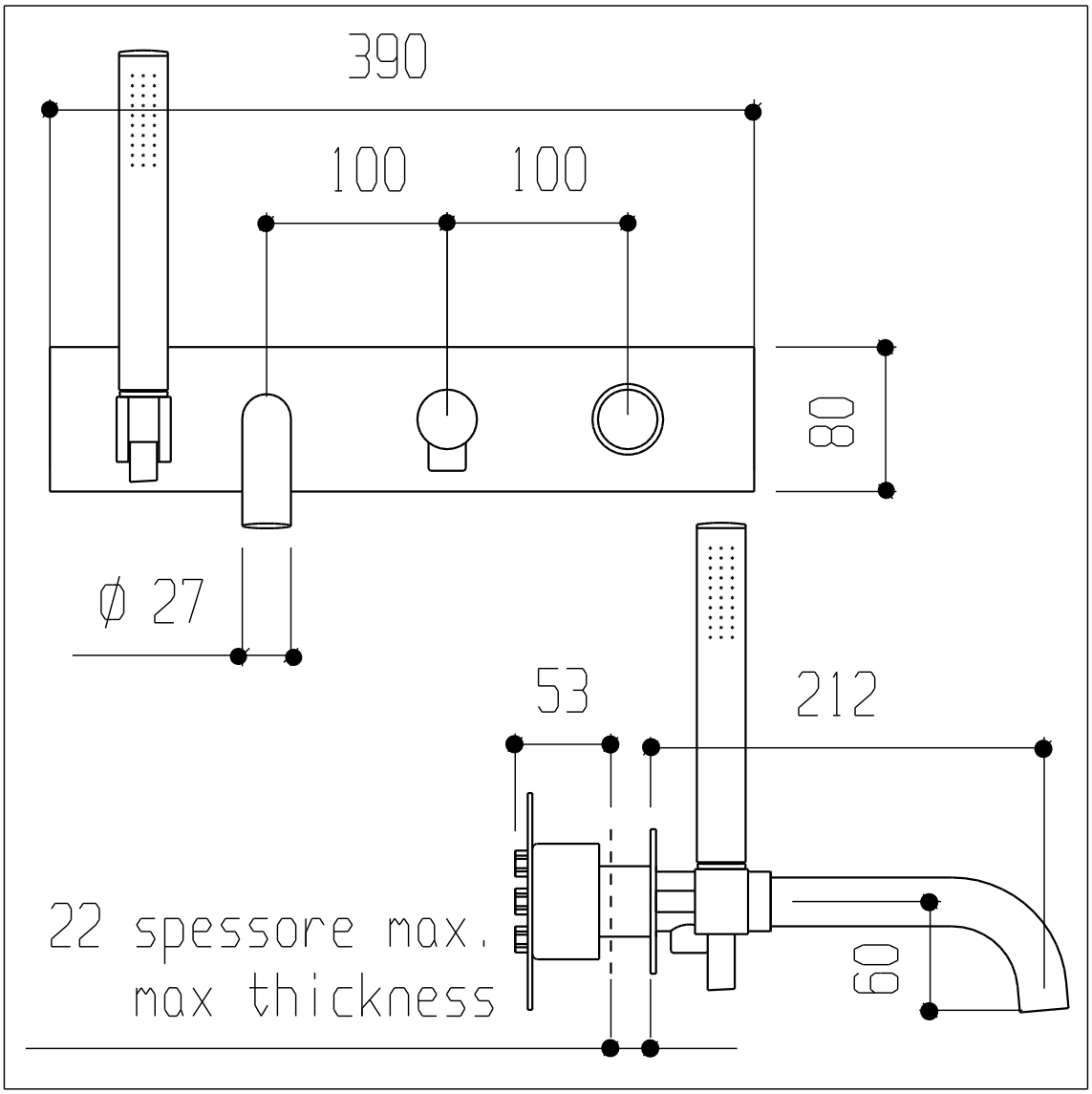
390
100
100
80
Ø 27
53
212
22 spessore max.
max thickness
60