ZERO

2 HOLE DECK MOUNTED BASIN MIXER
WITH 206mm SPOUT AND WASTE



chrome	113100/F

ON REQUEST 20 PCS EACH

satin nickel	AS113100/F
black	B113100/F
gold	G113100/F
copper	C113100/F
satin gold	SG113100/F

ALTERNATIVE HANDLE OPTIONS



313100/F



343100/F

COMPONENTS		
DECK MOUNTED BASIN MIXER	chrome	113000/19C
DECK MOUNTED BASIN 206mm SPOUT	chrome	113100/F

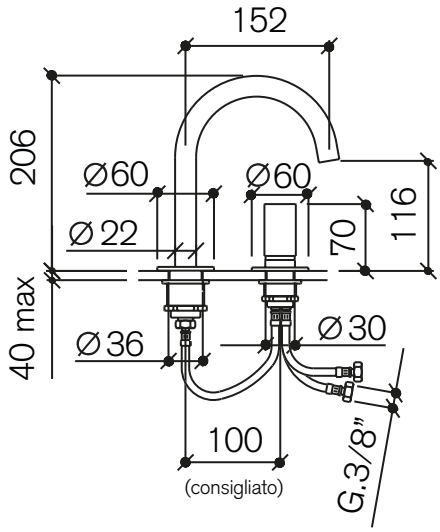

WRAS Certificate Number
1410021

FLOW RATES	
3.0 bar	8,3 lpm

T. 01375 392100
info@aquaplussolutions.com