

SHOWER WALL OUTLET INCLUDING
HAND SHOWER KIT AND PLATE

	chrome	112330/99C
	satin nickel	AS112330/99C
	black	B112330/99C
	gold	G112330/99C

ON REQUEST 20 PCS EACH

	copper	C112330/99C
	satin gold	SG112330/99C

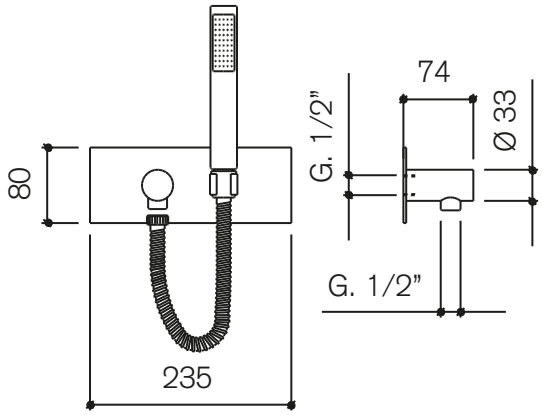

WRAS Certificate Number
1610036

FLOW RATES	
3.0 bar	14 lpm

T. 01375 392100
info@aquaplussolutions.com